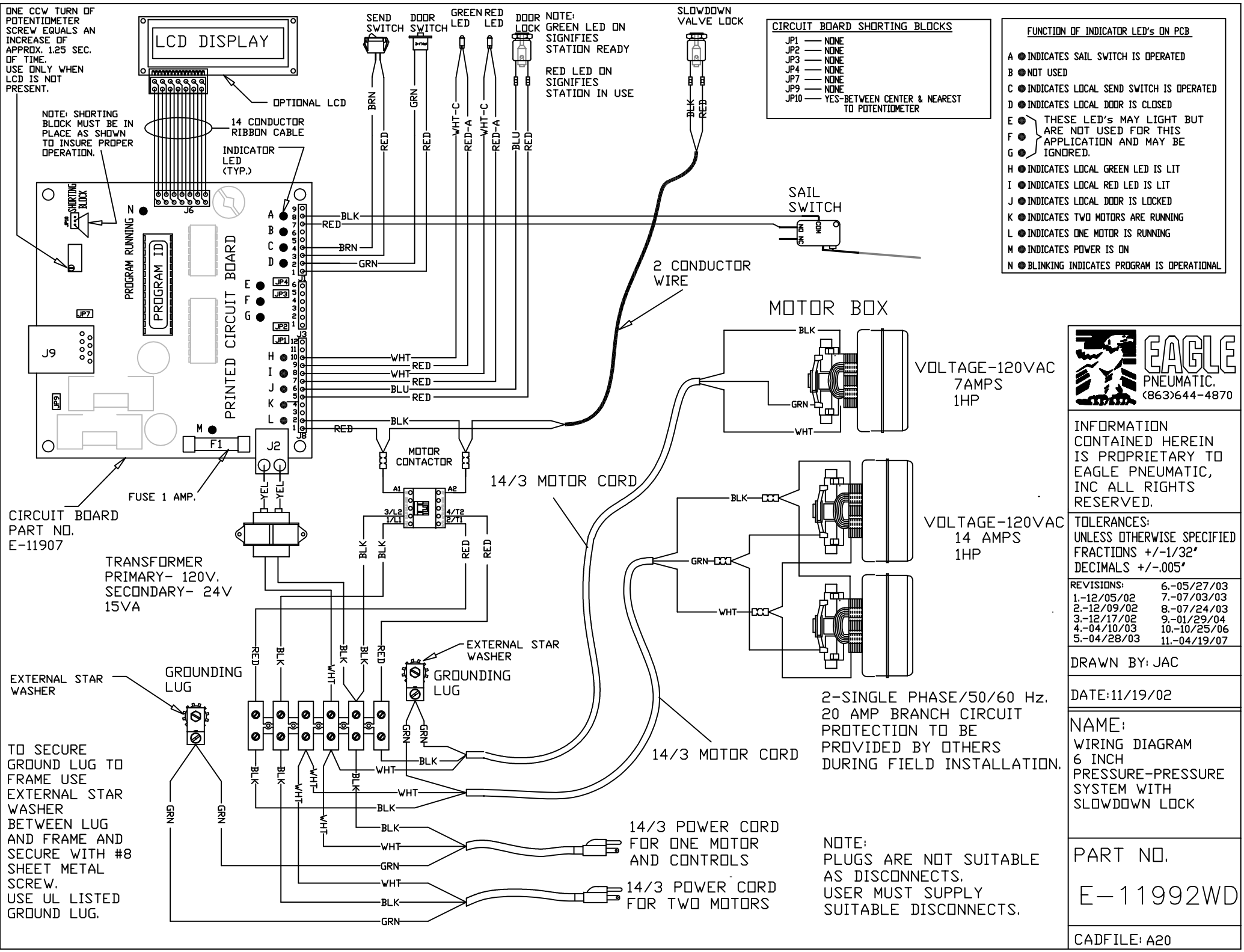
ONE CCW TURN OF POTENTIOMETER SCREW EQUALS AN INCREASE OF APPROX. 1.25 SEC. OF TIME. USE ONLY WHEN LCD IS NOT PRESENT.
LCD DISPLAY
OPTIONAL LCD
NOTE: SHORTING BLOCK MUST BE IN PLACE AS SHOWN TO INSURE PROPER OPERATION.
14 CONDUCTOR RIBBON CABLE
INDICATOR LED (TYP.)
SHORTING BLOCK
JP8
J6
PROGRAM RUNNING
PROGRAM ID
PRINTED CIRCUIT BOARD
J9
JP7
JP9
F1
J2
FUSE 1 AMP.
CIRCUIT BOARD PART NO. E-11907
SEND SWITCH
DOOR SWITCH
GREEN LED
RED LED
DOOR LOCK
NOTE: GREEN LED ON SIGNIFIES STATION READY
RED LED ON SIGNIFIES STATION IN USE
SLOWDOWN VALVE LOCK
SAIL SWITCH
NC
COM
NO
2 CONDUCTOR WIRE
MOTOR BOX
VOLTAGE-120VAC 7AMPS 1HP
VOLTAGE-120VAC 14 AMPS 1HP
MOTOR CONTACTOR
A1
A2
3/L2
1/L1
4/T2
2/T1
14/3 MOTOR CORD
TRANSFORMER PRIMARY- 120V. SECONDARY- 24V 15VA
EXTERNAL STAR WASHER
GROUNDING LUG
TO SECURE GROUND LUG TO FRAME USE EXTERNAL STAR WASHER BETWEEN LUG AND FRAME AND SECURE WITH #8 SHEET METAL SCREW. USE UL LISTED GROUND LUG.
2-SINGLE PHASE/50/60 Hz. 20 AMP BRANCH CIRCUIT PROTECTION TO BE PROVIDED BY OTHERS DURING FIELD INSTALLATION.
14/3 POWER CORD FOR ONE MOTOR AND CONTROLS
14/3 POWER CORD FOR TWO MOTORS
NOTE: PLUGS ARE NOT SUITABLE AS DISCONNECTS. USER MUST SUPPLY SUITABLE DISCONNECTS.
CIRCUIT BOARD SHORTING BLOCKS
JP1 — NONE
JP2 — NONE
JP3 — NONE
JP4 — NONE
JP7 — NONE
JP9 — NONE
JP10 — YES-BETWEEN CENTER & NEAREST TO POTENTIOMETER
FUNCTION OF INDICATOR LED's ON PCB
A INDICATES SAIL SWITCH IS OPERATED
B NOT USED
C INDICATES LOCAL SEND SWITCH IS OPERATED
D INDICATES LOCAL DOOR IS CLOSED
E F G THESE LED's MAY LIGHT BUT ARE NOT USED FOR THIS APPLICATION AND MAY BE IGNORED.
H INDICATES LOCAL GREEN LED IS LIT
I INDICATES LOCAL RED LED IS LIT
J INDICATES LOCAL DOOR IS LOCKED
K INDICATES TWO MOTORS ARE RUNNING
L INDICATES ONE MOTOR IS RUNNING
M INDICATES POWER IS ON
N BLINKING INDICATES PROGRAM IS OPERATIONAL
EAGLE PNEUMATIC. (863)644-4870
INFORMATION CONTAINED HEREIN IS PROPRIETARY TO EAGLE PNEUMATIC, INC ALL RIGHTS RESERVED.
TOLERANCES: UNLESS OTHERWISE SPECIFIED FRACTIONS +/-1/32" DECIMALS +/-.005"
REVISIONS:
1.-12/05/02
2.-12/09/02
3.-12/17/02
4.-04/10/03
5.-04/28/03
6.-05/27/03
7.-07/03/03
8.-07/24/03
9.-01/29/04
10.-10/25/06
11.-04/19/07
DRAWN BY: JAC
DATE: 11/19/02
NAME: WIRING DIAGRAM 6 INCH PRESSURE-PRESSURE SYSTEM WITH SLOWDOWN LOCK
PART NO. E-11992WD
CADFILE: A20